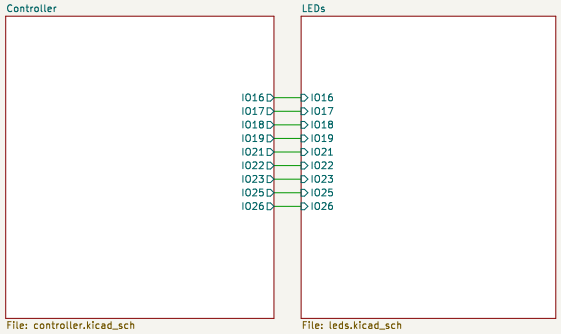

www.fiverr.com/jakky91

Designed By: shp athula kumara

Sheet: /

File: design.kicad_sch

Title:

Size: A3	Date: 2023-10-12	**Rev: v1.1**
KiCad E.D.A. kicad 7.0.9		Id: 1/3

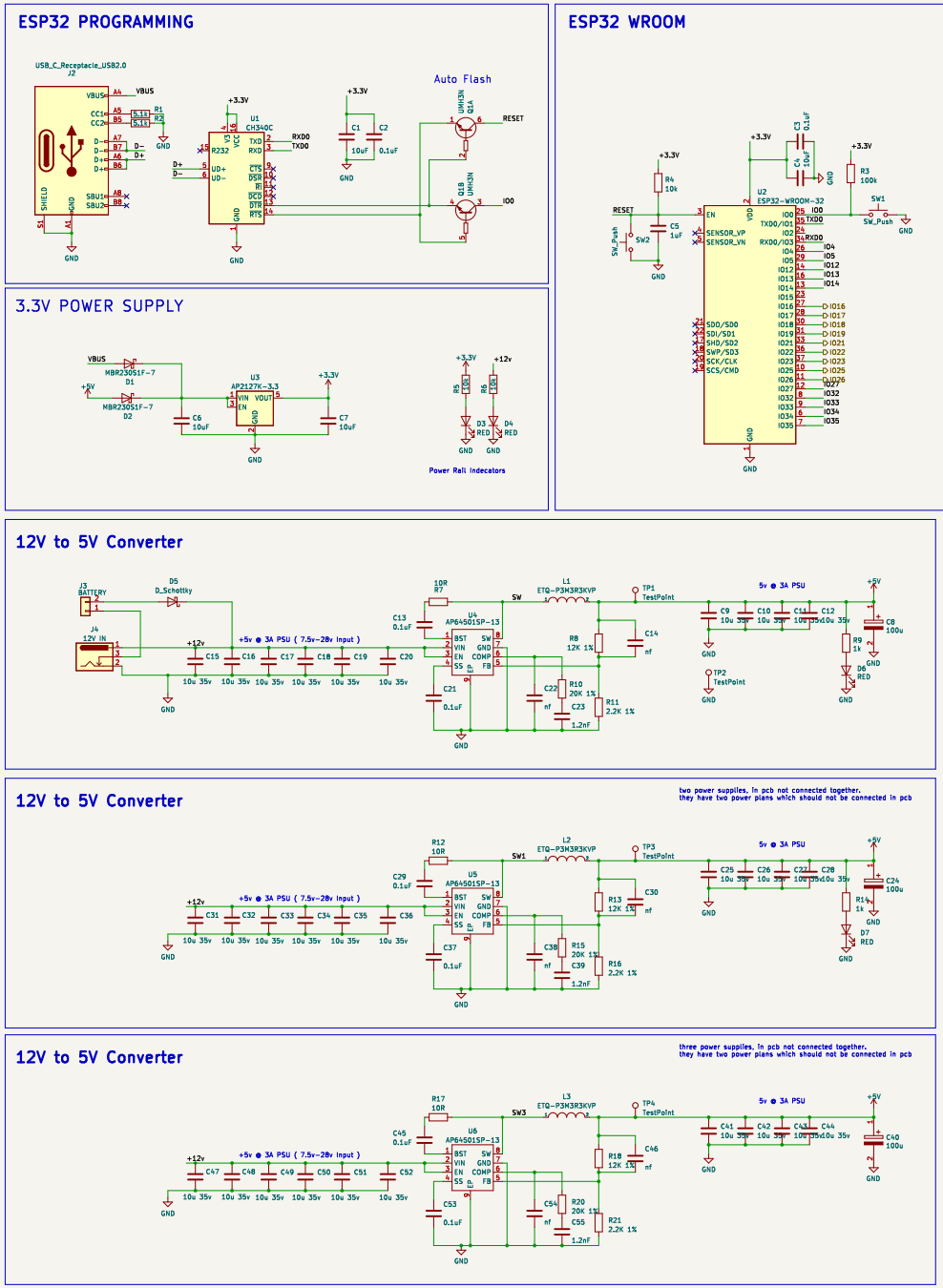

Sheet: /Controller/
File: controller.kicad_sch

Title:

Size: A2	Date: 2023-12-09	Rev:
KiCad E.D.A. kicad 7.0.9		Id: 2/3

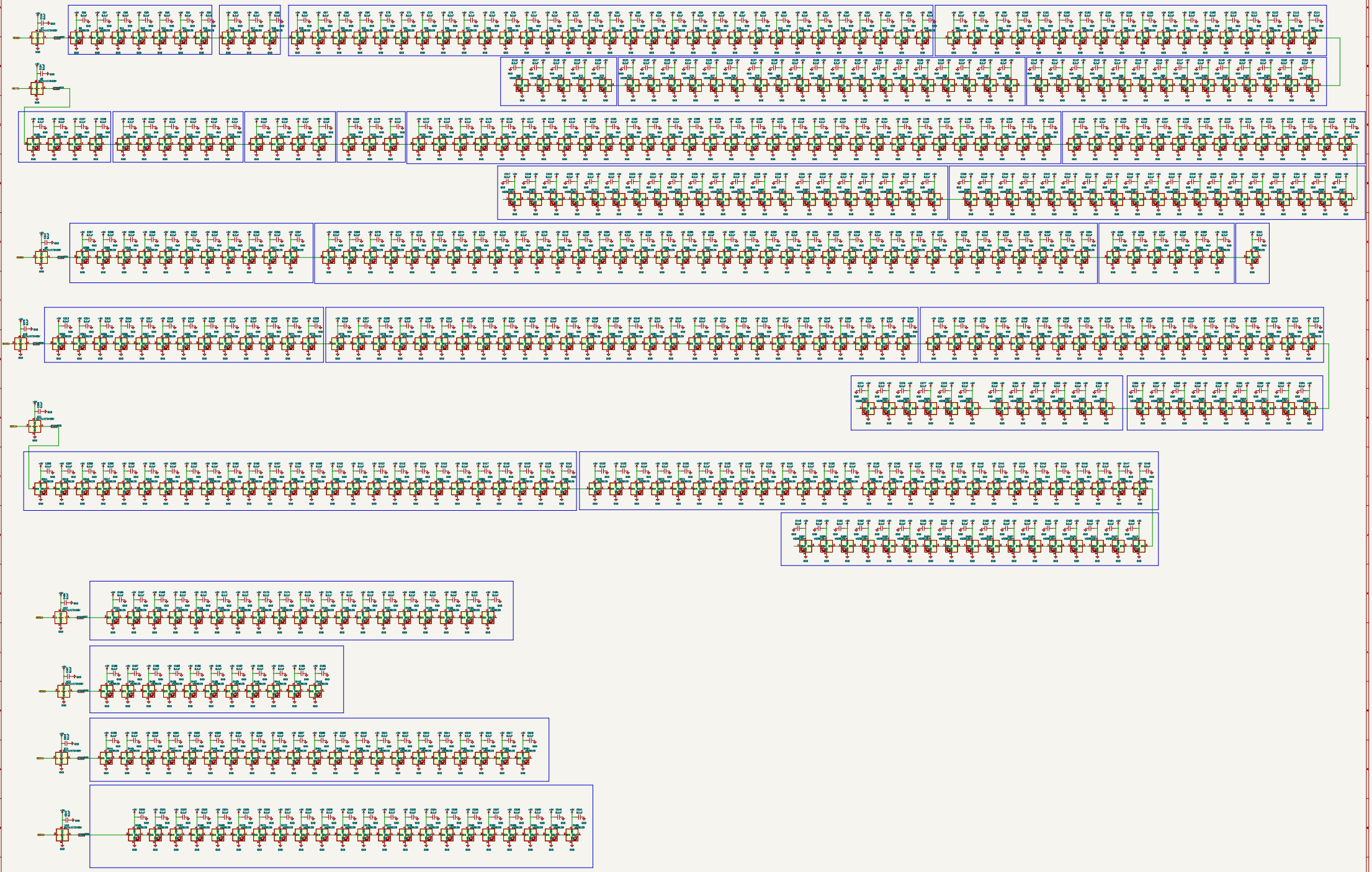

Sheet /Clk/
File: bmb/bad.sch
Title:
Size: A0 Date: 2021-12-31 Rev:
KiCad E.D.A. kicad 7.0.2 Id: 9/23